Cross-beam connection

HTR-STS 40x40 D30 WI

Art.-Nr.: 10.08.03.00090

HTR-STS 40x40 D30 WI

Technical data

Connection 1	40x40
Suction cup or spring plunger connection	Contour D30-G1/2
Shape	angled

Holder for square tubes HTR-STS is delivered as a ready-to-connect product.

Available accessories: washer with shoulder and washer

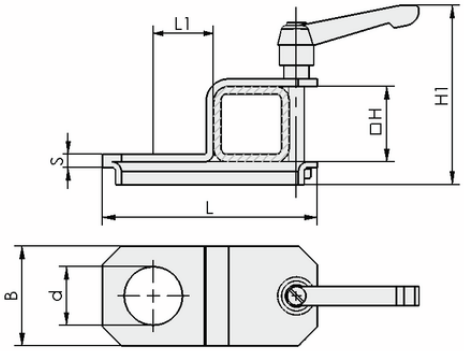

Design data HTR-STS 40x40 D30 WI

Design data

Length L1	32.00 mm
Length L	114.00 mm
Width B	53.00 mm
Height H1	95.00 mm
Height H	40.00 mm
Internal diameter d	31.00 mm
Wall thickness s	7.00 mm

Contact Schmalz: J. Schmalz GmbH, Johannes-Schmalz-Str. 1 • 72293 Glatten • +49 7443 2403-105 • kundencenter@schmalz.de

Cross-beam connection

HTR-STS 40x40 D30 WI

Art.-Nr.: 10.08.03.00090

Technical data

Weight	422.00 g
Product family	HTR-STS

Ordering Data Accessories 10.08.03.00090

Typ		Item number
Washer with shoulder	SCHE 35-16.5x5 ST VZ	10.01.01.10025
Washer with shoulder	SCHE 38-18.5x5 ST VZ	10.01.03.06140
Washer with shoulder	SCHE 38-21.5x5 ST VZ	10.01.01.10015
Washer (Standard)	SCHE 7090 M30 ST-HV VZ	20.06.01.00044

Contact Schmalz: J. Schmalz GmbH, Johannes-Schmalz-Str. 1 • 72293 Glatten • +49 7443 2403-105 • kundencenter@schmalz.de