Hose clamp

SSB 112-125 ST-VZ

Art.-Nr.: 10.07.10.00025

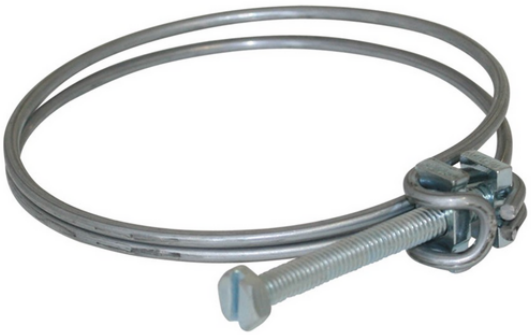

SSB 112-125 ST-VZ

Hose clamp SSB / SSD is delivered in the desired diameter.

Available accessories: cap

Technical data

Material	Steel
Clamping range [mm]	112.0 ... 125.0 mm
Surface	galvanised

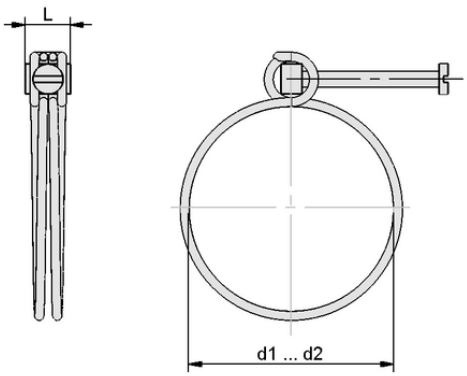

Design data SSB 112-125 ST-VZ

Design data

Internal diameter d1	112.0 mm
d2	125.0 mm

Contact Schmalz: J. Schmalz GmbH, Johannes-Schmalz-Str. 1 • 72293 Glatten • +49 7443 2403-105 • kundencenter@schmalz.de

Hose clamp

SSB 112-125 ST-VZ

Art.-Nr.: 10.07.10.00025

Technical data

Material	Steel
Product family	SSB / SSD
Clamping range [mm]	112.0 ... 125.0 mm

Contact Schmalz: J. Schmalz GmbH, Johannes-Schmalz-Str. 1 • 72293 Glatten • +49 7443 2403-105 • kundencenter@schmalz.de