Centering sealing ring

DR G1/2 PA Easy-Fix

Art.-Nr.: 10.07.08.00250

DR G1/2 PA Easy-Fix

The sealing ring DR is supplied in the required diameter.

Technical data

Material	Polyamide
Height H	2.00 mm
Outside diameter D	26.00 mm
Internal diameter d	21.10 mm
for	G1/2
Type	Easy-Fix

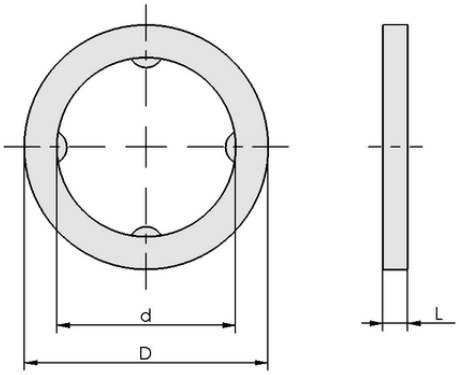

Design data DR G1/2 PA Easy-Fix

Design data

Length L	2.00 mm
Outside diameter D	26.00 mm
Internal diameter d	21.10 mm
for	G1/2

Technical data

Weight	1.00 g
Material	Polyamide
Product family	DR

Contact Schmalz: J. Schmalz GmbH, Johannes-Schmalz-Str. 1 • 72293 Glatten • +49 7443 2403-105 • kundencenter@schmalz.de