Schmalz X-Pump

SCPXi 15 IMP Q 2xM12-5

Art.-Nr.: 10.02.02.08167

SCPXi 15 IMP Q 2xM12-5

Technical data

Attribute	Value
Electrical connection	2xConnect M12, 2x5 pol
Protection type IP	IP 65 (with plug)
Nozzle size	1.5 mm
Max. vacuum	-850 mbar
Weight	0.850 kg
Air consumption suction	115.0 l/min
Suction rate (max.)	70.0 l/min
Communication	IO-Link (Class A)
Connection	G3/8"-F
Control valve	Impulse valve
Operation mode	Pressure Control

The compact ejector SCPXi is delivered as a ready-to-connect product (without a connection cable).

Available spare parts: wear parts kit, silencer, electronics module, pilot valves

Available accessories: connection cable, base plate

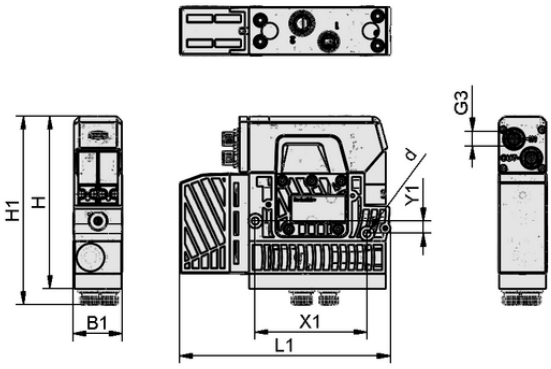

Design data SCPXi 15 IMP Q 2xM12-5

Design data

Attribute	Value
Length L1	168.00 mm
Width B1	39.00 mm
Height H1	149.50 mm
Height H	137.00 mm
Internal diameter d	5.60 mm
Hole spacing Y1	10.0 mm
Hole spacing X1	89.0 mm
Thread G3	M12x1-M

Contact Schmalz: J. Schmalz GmbH, Johannes-Schmalz-Str. 1 • 72293 Glatten • +49 7443 2403-105 • kundencenter@schmalz.de

Schmalz X-Pump

SCPXi 15 IMP Q 2xM12-5

Art.-Nr.: 10.02.02.08167

Technical data

Attribute	Value
Electrical connection	2xConnect M12, 2x5 pol
Protection type IP	IP 65 (with plug)
Nozzle size	1.5 mm
Recommended hose internal diameter compressed air	6.0 mm
Recommended hose internal diameter vacuum	6.0 mm
Degree of evacuation	85.0 %
Max. vacuum	-850 mbar
Weight	850.00 g
Max. air consumption blow-off	320.0 l/min
Air consumption blow-off	19.200 m^3/h
Air consumption suction	6.900 m^3/h
Suction rate (max.)	4.200 m^3/h
Communication	IO-Link (Class A)
Pressure range (operating pressure) [bar]	3.0 ... 6.0 bar
Operating temperature	0 ... 50 °C
Control valve	Impulse valve
Operation mode	Pressure Control

Achievable vacuum at various operating pressures

	2	3	4	5	6	7
SCPXi	550.00	780.00	900.00	880.00	860.00	835.00

Further documentation

CAD data and other documents relating to the article can be found at: **www.schmalz.com/10.02.02.08167**

Contact Schmalz: J. Schmalz GmbH, Johannes-Schmalz-Str. 1 • 72293 Glatten • +49 7443 2403-105 • kundencenter@schmalz.de