Schmalz X-Pump

SCPXi 20 NO Q M12-5

Art.-Nr.: 10.02.02.08157



SCPXi 20 NO Q M12-5

Technical data

Attribute	Value
Electrical connection	Male connect M12, 5 pol
Protection type IP	IP 65 (with plug)
Nozzle size	2.0 mm
Max. vacuum	-850 mbar
Weight	0.850 kg
Air consumption suction	180.0 l/min
Suction rate (max.)	135.0 l/min
Communication	IO-Link (Class B)
Connection	G3/8"-F
Control valve	Normally open
Operation mode	Pressure Control

The compact ejector SCPXi is delivered as a ready-to-connect product (without a connection cable).

Available spare parts: wear parts kit, silencer, electronics module, pilot valves

Available accessories: connection cable, base plate

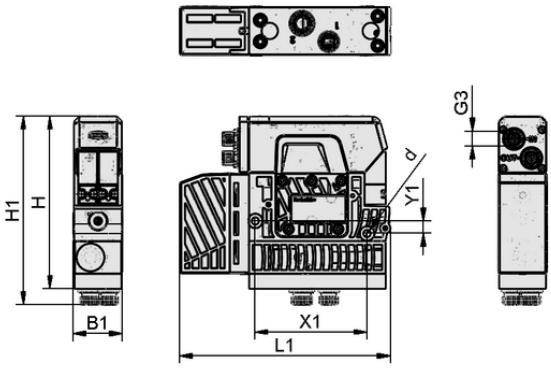

Design data SCPXi 20 NO Q M12-5

Design data

Attribute	Value
Length L1	168.00 mm
Width B1	39.00 mm
Height H1	149.50 mm
Height H	137.00 mm
Internal diameter d	5.60 mm
Hole spacing Y1	10.0 mm
Hole spacing X1	89.0 mm
Thread G3	M12x1-M

Contact Schmalz: J. Schmalz GmbH, Johannes-Schmalz-Str. 1 • 72293 Glatten • +49 7443 2403-105 • kundencenter@schmalz.de

Schmalz X-Pump

SCPXi 20 NO Q M12-5

Art.-Nr.: 10.02.02.08157

Technical data

Attribute	Value
Electrical connection	Male connect M12, 5 pol
Protection type IP	IP 65 (with plug)
Nozzle size	2.0 mm
Recommended hose internal diameter compressed air	6.0 mm
Recommended hose internal diameter vacuum	8.0 mm
Degree of evacuation	85.0 %
Max. vacuum	-850 mbar
Weight	850.00 g
Max. air consumption blow-off	320.0 l/min
Air consumption blow-off	19.200 m^3/h
Air consumption suction	10.800 m^3/h
Suction rate (max.)	8.100 m^3/h
Communication	IO-Link (Class B)
Pressure range (operating pressure) [bar]	3.0 ... 6.0 bar
Operating temperature	0 ... 50 °C
Control valve	Normally open
Operation mode	Pressure Control

Contact Schmalz: J. Schmalz GmbH, Johannes-Schmalz-Str. 1 • 72293 Glatten • +49 7443 2403-105 • kundencenter@schmalz.de

Schmalz X-Pump

SCPXi 20 NO Q M12-5

Art.-Nr.: 10.02.02.08157

Performance data

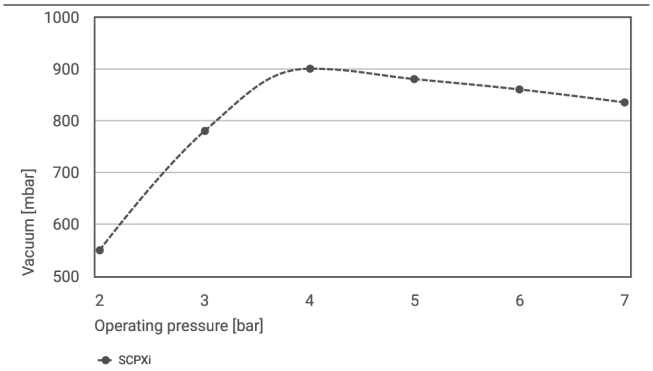

Achievable vacuum at various operating pressures

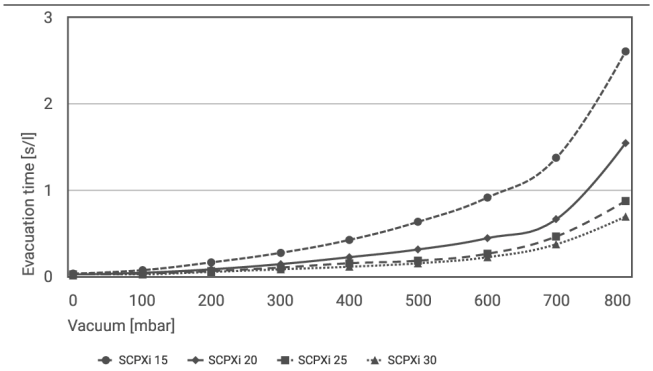

Evacuation time for various vacuum ranges [s/l]

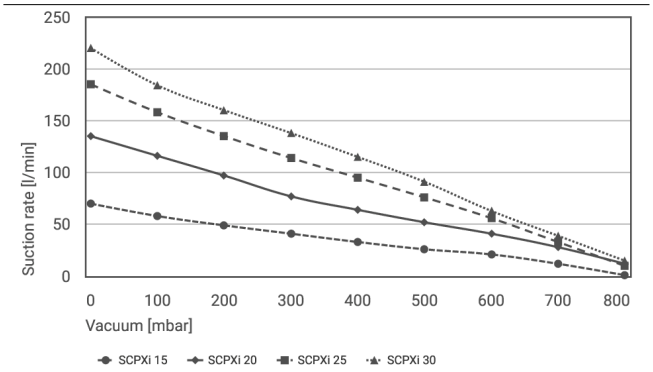

Suction rate at various degrees of evacuation [l/min]

Achievable vacuum at various operating pressures

	2	3	4	5	6	7
SCPXi	550.00	780.00	900.00	880.00	860.00	835.00

Contact Schmalz: J. Schmalz GmbH, Johannes-Schmalz-Str. 1 • 72293 Glatten • +49 7443 2403-105 • kundencenter@schmalz.de

Schmalz X-Pump

SCPXi 20 NO Q M12-5

Art.-Nr.: 10.02.02.08157

Evacuation time for various vacuum ranges [s/l]

	0	100	200	300	400	500	600	700	800
SCPXi 15	0.03	0.07	0.16	0.27	0.42	0.63	0.91	1.37	2.60
SCPXi 20	0.02	0.04	0.08	0.14	0.22	0.31	0.44	0.66	1.54
SCPXi 25	0.02	0.03	0.06	0.10	0.15	0.18	0.26	0.46	0.87
SCPXi 30	0.01	0.02	0.05	0.08	0.11	0.15	0.22	0.37	0.69

Suction rate at various degrees of evacuation [l/min]

	0	100	200	300	400	500	600	700	800
SCPXi 15	70.00	58.00	49.00	41.00	33.00	26.00	21.00	12.00	1.00
SCPXi 20	135.00	116.00	97.00	77.00	64.00	52.00	41.00	28.00	12.00
SCPXi 25	185.00	158.00	135.00	114.00	95.00	76.00	56.00	33.00	10.00
SCPXi 30	220.00	184.00	160.00	138.00	115.00	91.00	63.00	39.00	15.00

Further documentation

CAD data and other documents relating to the article can be found at: **www.schmalz.com/10.02.02.08157**

Contact Schmalz: J. Schmalz GmbH, Johannes-Schmalz-Str. 1 • 72293 Glatten • +49 7443 2403-105 • kundencenter@schmalz.de