Schmalz X-Pump

SXPi 30 IMP H M12-8

Art.-Nr.: 10.02.02.03796

SXPi 30 IMP H M12-8

Technical data

Nozzle diameter	3.0 mm
Electrical connection	Male connect M12, 8 pol
Protection type IP	IP 65
Max. vacuum	850 mbar
Sound pressure level free	72.0 dB(A)
Air consumption suction	380.0 l/min
Suction rate (max.)	220.0 l/min
Communication	IO-Link (Class A)
Pressure range (operating pressure) [bar]	3.0 ... 6.0 bar
Control valve	Impulse valve
Pneumatic connection	Horizontal

Compact ejector SXPi / SXMPi is delivered as a ready-to-connect product (without connection cable).

Available spare parts: connection cable, base plate, ejector tester

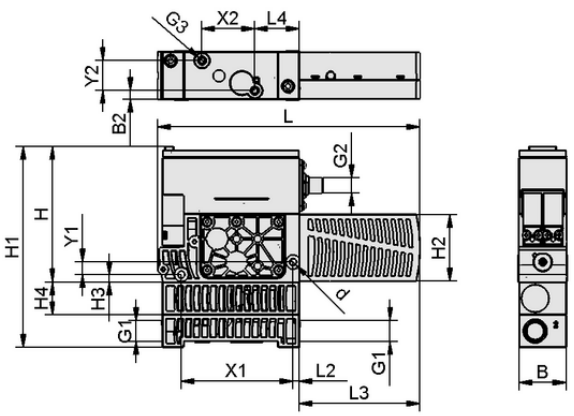

Design data SXPi 30 IMP H M12-8

Design data

Length L2	5.00 mm
Length L	210.00 mm
Width B2	6.80 mm
Width B	39.00 mm
Height H1	134.00 mm
Height H2	54.00 mm
Height H	108.00 mm
Internal diameter d	5.50 mm
Thread G1	G3/8"-F
Thread G2	M12x1-M
Length L3	97.00 mm
Length L4	35.50 mm
Height H3	6.00 mm
Hole spacing Y1	10.0 mm
Hole spacing Y2	24.0 mm
Hole spacing X1	89.0 mm
Hole spacing X2	42.0 mm
Thread G3	M5-F

Contact Schmalz: J. Schmalz GmbH, Johannes-Schmalz-Str. 1 • 72293 Glatten • +49 7443 2403-105 • kundencenter@schmalz.de

SXPi 30 IMP H M12-8

Art.-Nr.: 10.02.02.03796

Technical data

Nozzle diameter	3.0 mm
Recommended hose internal diameter compressed air	8.0 mm
Recommended hose internal diameter vacuum	9.0 mm
Degree of evacuation	85.0 %
Sound pressure level free	72.0 dB(A)
Weight	0.770 kg
Max. air consumption blow-off	200.0 l/min
Air consumption blow-off	7.062 cfm
Air consumption suction	13.419 cfm
Suction rate (max.)	7.769 cfm
Pressure range (operating pressure) [bar]	3.0 ... 6.0 bar
Operating temperature	0 ... 50 °C
Pressure range (operating pressure) [psi]	43.5 ... 87.0
Product family	SXPi
Control valve	Impulse valve

Note: The supply voltage for vacuum switches and solenoid valves is 24V DC Air consumption: At optimal operating pressure Hose diameter: For max. length 2 m

Contact Schmalz: J. Schmalz GmbH, Johannes-Schmalz-Str. 1 • 72293 Glatten • +49 7443 2403-105 • kundencenter@schmalz.de

SXPi 30 IMP H M12-8

Art.-Nr.: 10.02.02.03796

Performance data

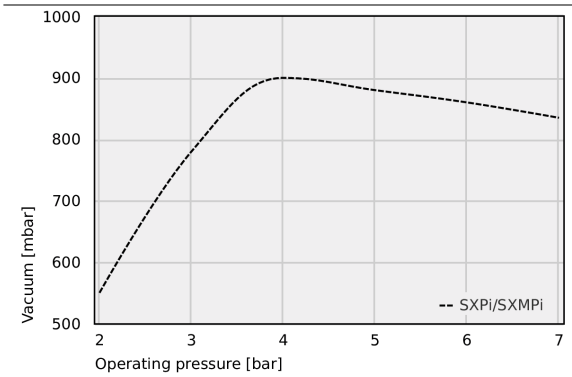

Achievable vacuum at various operating pressures

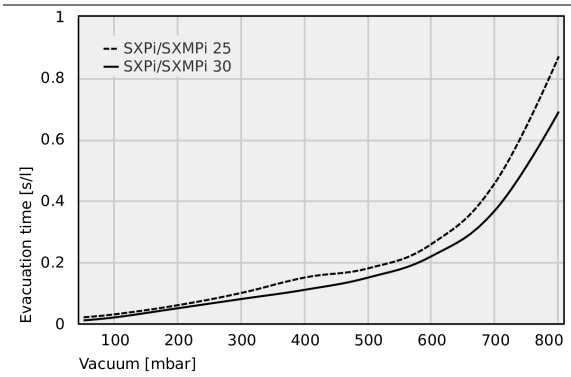

Evacuation time for various vacuum ranges [s/l]

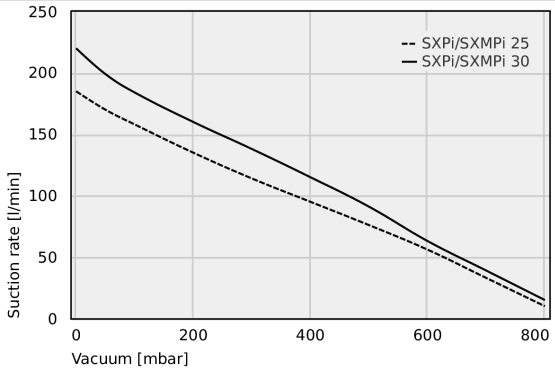

Suction rate at various degrees of evacuation [l/min]

Achievable vacuum at various operating pressures

	2	3	4	5	6	7
SXPi/SXMPi	550.00	780.00	900.00	880.00	860.00	835.00

Evacuation time for various vacuum ranges [s/l]

	50	100	200	300	400	500	600	700	800
SXPi/SXMPi 25	0.02	0.03	0.06	0.10	0.15	0.18	0.26	0.46	0.87
SXPi/SXMPi 30	0.01	0.02	0.05	0.08	0.11	0.15	0.22	0.37	0.69

Contact Schmalz: J. Schmalz GmbH, Johannes-Schmalz-Str. 1 • 72293 Glatten • +49 7443 2403-105 • kundencenter@schmalz.de

SXPi 30 IMP H M12-8

Art.-Nr.: 10.02.02.03796

Suction rate at various degrees of evacuation [l/min]

	0	50	100	200	300	400	500	600	700	800
SXPi/SXMPi 25	185.00	170.00	158.00	135.00	114.00	95.00	76.00	56.00	33.00	10.00
SXPi/SXMPi 30	220.00	199.00	184.00	160.00	138.00	115.00	91.00	63.00	39.00	15.00

Ordering Data Accessories 10.02.02.03796

Typ		Item number
Connection cable	ASK B-M12-8 5000 K-8P	21.04.05.00079

Ordering Data Spare Parts 10.02.02.03796

Typ		Item number
Silencer (cube-shaped)	SD 96x54x40 SXPi/SXMPi	10.02.02.02124

Ordering Data Wear Parts 10.02.02.03796

Typ		Item number
Set of wearing parts ejector	VST SXPi-15-30-SD	10.02.02.04283

Contact Schmalz: J. Schmalz GmbH, Johannes-Schmalz-Str. 1 • 72293 Glatten • +49 7443 2403-105 • kundencenter@schmalz.de