Basic Ejector

SBP-C 25 G03 NO A

Art.-Nr.: 10.02.01.00628

SBP-C 25 G03 NO A

Technical data

Nozzle diameter	2.5 mm
Degree of evacuation	85.0 %
Air consumption suction	311.0 l/min
Suction rate (max.)	215.0 l/min
Optimal operating pressure	5.20 bar
Connection	G1/4"(1)-G3/8"(1)
Shape compact ejectors	Blow-off function
Control valve	Normally open

The basic ejector SBP-C is delivered as a ready-to-connect product (without connection cable).

Available spare parts: silencer

Available accessories: mounting plate, mounting set, connection cable

Contact Schmalz: J. Schmalz GmbH, Johannes-Schmalz-Str. 1 • 72293 Glatten • +49 7443 2403-105 • kundencenter@schmalz.de

Basic Ejector

SBP-C 25 G03 NO A

Art.-Nr.: 10.02.01.00628

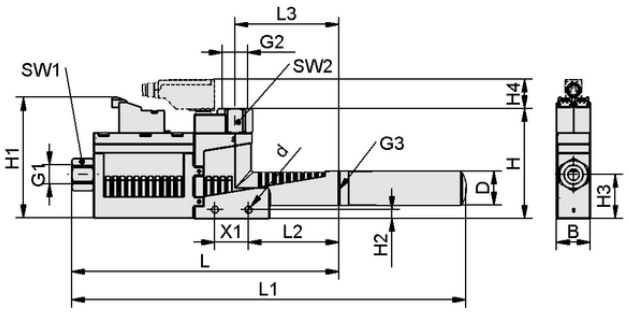

Design data SBP-C 25 G03 NO A

Design data

Length L1	235.50 mm
Length L2	54.00 mm
Length L	159.50 mm
Width B	20.00 mm
Height H1	72.00 mm
Height H2	5.20 mm
Height H	65.50 mm
Outside diameter D	20.00 mm
Internal diameter d	4.20 mm
Thread G1	G1/4"-F
Thread G2	G3/8"-F
Key width SW1	17.0 mm
Spanner size SW2	19.0 mm
Length L3	62.00 mm
Height H3	8.50 mm
Hole spacing X1	20.0 mm
Thread G3	G3/8"-F

Technical data

Nozzle diameter	2.5 mm
Recommended hose internal diameter compressed air	6.0 mm
Recommended hose internal diameter vacuum	7.0 mm
Degree of evacuation	85.0 %
Sound pressure level suction	70.0 dB(A)
Sound pressure level free	78.0 dB(A)
Weight	144.00 g
Air consumption suction	10.982 cfm
Suction rate (max.)	7.592 cfm
Optimal operating pressure	5.20 bar
Pressure range (operating pressure) [bar]	3.0 ... 6.0 bar
Operating temperature	0 ... 50 °C
Pressure range (operating pressure) [psi]	43.5 ... 87.0
Air consumption blow-off	3.708 cfm
Optimal pressure	75.4 psi
Product family	SBP-C

Note: The supply voltage for vacuum switches and solenoid valves is 24 VDC Air consumption: On version with solenoid valves SBP-C 07 (24) / SBP-C 25 (320) and optimal operating pressure Hose diameter: For max. length 2 m

Contact Schmalz: J. Schmalz GmbH, Johannes-Schmalz-Str. 1 • 72293 Glatten • +49 7443 2403-105 • kundencenter@schmalz.de

Basic Ejector

SBP-C 25 G03 NO A

Art.-Nr.: 10.02.01.00628

Performance data

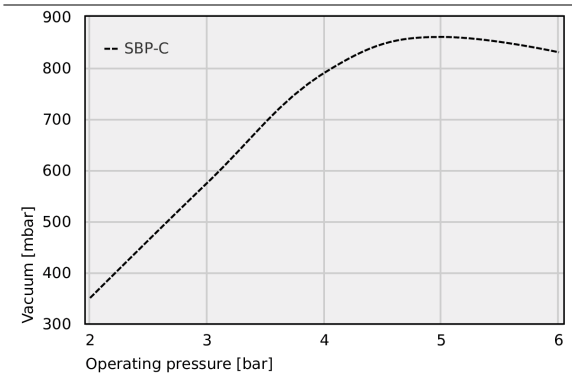

Achievable vacuum at various operating pressures

Achievable vacuum at various operating pressures

	2	3	4	5	6
SBP-C	350.00	575.00	790.00	860.00	830.00

Ordering Data Accessories 10.02.01.00628

Typ		Item number
Mounting plate	BEF-PL 110x44.5x3 SBP	10.02.01.00511
Mounting set	SET SBP M4-IG	10.02.01.00769
Connection cable	ASK B-MIC10 3000 K-2P	21.04.06.00086
Vacuum cup filter	VFT G3/8-IG 80	10.07.01.00122

Ordering Data Spare Parts 10.02.01.00628

Typ		Item number
Silencer (round)	SD G3/8-AG 20x76 SBP	10.02.01.00719

Contact Schmalz: J. Schmalz GmbH, Johannes-Schmalz-Str. 1 • 72293 Glatten • +49 7443 2403-105 • kundencenter@schmalz.de