Bell suction cup (oval)

# SAOXM 60x20 ED-85 G1/4-AG

Art.-Nr.: 10.01.24.00033

SAOXM 60x20 ED-85 G1/4-AG

## Technical data

| | |
|---|---|
| Suction cup material | Elastodur ED |
| Material hardness [Shore A] | 85.0 Shore A |
| Additional function suction cup | Friction disc |
| Connection | G1/4-AG |
| Nipple material | Aluminum |

Bell-shaped suction cup SAOXM (elastomer part with insert including friction disc + connection element) is delivered assembled.The assembly consists of:

- Bell-shaped suction cup of type SAOXM – elastomer part, available in various dimensions
- Insert – including moulded friction disc
- Connector upper part – available with various threads
- Connector lower part

Available spare parts: suction cup SAOXM, Schmalz-Connector-Insert, Schmalz-Connector upper part (Schmalz-Connector-Adapter), Schmalz-Connector lower part (Schmalz-Connector-Screw)

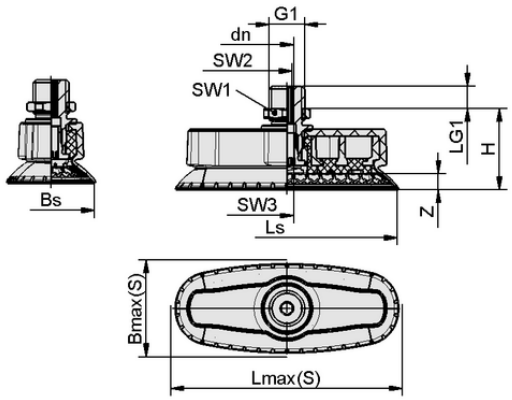


Design data SAOXM 60x20 ED-85 G1/4-AG

## Design data

| | |
|---|---|
| Height H | 29.80 mm |
| Nominal diameter dn | 4.10 mm |
| Thread G1 | G1/4"-M |
| Thread length LG1 | 8.0 mm |
| Key width SW1 | 17.0 mm |
| Spanner size SW2 | 4.0 mm |
| Spring stroke Z | 4.5 mm |
| Suction cup width Bs | 18.70 mm |
| Ls | 61.80 mm |
| Key width SW3 | 5.0 mm |
| Lmax.(S) | 67.00 mm |
| Bmax(S) | 24.00 mm |



**Contact Schmalz:** J. Schmalz GmbH, Johannes-Schmalz-Str. 1 • 72293 Glatten • +49 7443 2403-105 • kundencenter@schmalz.de

Bell suction cup (oval)

# SAOXM 60x20 ED-85 G1/4-AG

Art.-Nr.: 10.01.24.00033

## Technical data

| | |
|---|---|
| Suction cup material | Elastodur ED |
| Material hardness [Shore A] | 85.0 Shore A |
| Hose inner diameter (recom.) d | 4.0 mm |
| Workpiece radius min. (convex) | 10.0 mm |
| Suction force (-600mbar) | 56.00 N |
| Weight | 27.00 g |
| Dimension (LxW) | 60 x 20 |
| Lateral force | 44.0 N |
| Lateral force oily surface | 62.0 N |
| Volume | 5.000 $cm^3$ |
| Product family | SAOXM |

Note: Suction force: The suction force values are theoretical values at -0.6 bar vacuum and a dry, smooth and even workpiece surface – they are specified without safety factors. Hose inner diameter: The recommended hose diameter refers to a hose length of approx. 2 m

## Ordering Data Spare Parts 10.01.24.00033

| Typ | | Item number |
|---|---|---|
| Bell suction cup (oval) | SAOXM 60x20 ED-85 SC045-AR | 10.01.24.00001 |
| Schmalz-Connector-Insert | SC-I 045 AR-FDC | 10.01.24.00009 |
| Schmalz-Connector-Adapter | SC-A 045-AR G1/4-AG L | 10.01.06.03131 |
| Schmalz-Connector-Screw | SC-S 045 L | 10.01.06.02740 |

## Ordering Data Wear Parts 10.01.24.00033

| Typ | | Item number |
|---|---|---|
| Bell suction cup (oval) | SAOXM 60x20 ED-85 SC045-AR | 10.01.24.00001 |



**Contact Schmalz:** J. Schmalz GmbH, Johannes-Schmalz-Str. 1 • 72293 Glatten • +49 7443 2403-105 • kundencenter@schmalz.de