Bell suction cup (round)

SAX 50 ED-85 G1/4-AG RP

Art.-Nr.: 10.01.19.00215

SAX 50 ED-85 G1/4-AG RP

Technical data

Suction cup material	Elastodur ED
Material hardness [Shore A]	85.0 Shore A
Size	50.00
Number of folds	0.0
Connection	G1/4"-M

Suction cup SAX, available in various diameters, is delivered with connection nipple vulcanized to elastomer part.

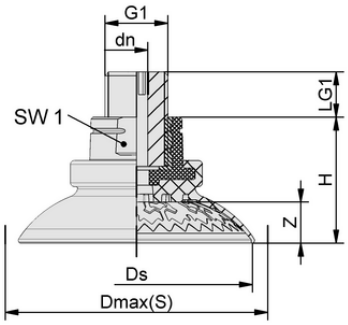

Design data SAX 50 ED-85 G1/4-AG RP

Design data

Height H	29.60 mm
Nominal diameter dn	6.10 mm
Thread G1	G1/4"-M
Thread length LG1	14.5 mm
Key width SW1	22.0 mm
Spring stroke Z	8.4 mm
Diameter Ds	51.5 mm
Diameter Dmax(S)	58.4 mm

Contact Schmalz: J. Schmalz GmbH, Johannes-Schmalz-Str. 1 • 72293 Glatten • +49 7443 2403-105 • kundencenter@schmalz.de

Bell suction cup (round)

SAX 50 ED-85 G1/4-AG RP

Art.-Nr.: 10.01.19.00215

Technical data

Suction cup material	Elastodur ED
Material hardness [Shore A]	85.0 Shore A
Workpiece radius min. (convex)	25.0 mm
Suction force (-600mbar)	109.00 N
Weight	34.70 g
Lateral force	74.0 N
Lateral force oily surface	110.0 N
Volume	15.200 cm^3
Size	50.00
Number of folds	0.0
Connection	G1/4"-M
Product family	SAX

Note: Suction force: The suction force values are theoretical values at -0.6 bar vacuum and a dry, smooth and even workpiece surface – they are specified without safety factors. Hose inner diameter: The recommended hose diameter refers to a hose length of approx. 2 m

31.12.2026

Contact Schmalz: J. Schmalz GmbH, Johannes-Schmalz-Str. 1 • 72293 Glatten • +49 7443 2403-105 • kundencenter@schmalz.de