Bell suction cup (round)

SAXM 115 ED-85 G1/4-IG

Art.-Nr.: 10.01.19.00044

SAXM 115 ED-85 G1/4-IG

Technical data

Suction cup material	Elastodur ED
Material hardness [Shore A]	85.0 Shore A
Size	115.00
Connection	G1/4-IG
Nipple material	Aluminum

Bell-shaped suction cup SAXM (elastomer part + connection element) is delivered assembled. As an alternative the individual parts can also be ordered separately. To do this, the following ordering steps are required:

- Bell-shaped suction cup of type SAXM (step 1) – elastomer part, available in various diameters
- Connector upper part (step 2) – available with various threads
- Connector lower part (step 3) – including molded friction disc

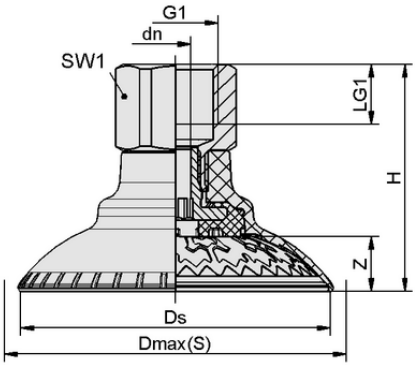

Design data SAXM 115 ED-85 G1/4-IG

Design data

Height H	60.10 mm
Nominal diameter dn	6.10 mm
Thread G1	G1/4"-F
Thread length LG1	12.0 mm
Key width SW1	22.0 mm
Spring stroke Z	20.0 mm
Diameter Ds	115.2 mm
Diameter Dmax(S)	129.4 mm

Note: Acceptable dimensional tolerances for elastomer parts concerning to DIN ISO 3302-1 M3

Contact Schmalz: J. Schmalz GmbH, Johannes-Schmalz-Str. 1 • 72293 Glatten • +49 7443 2403-105 • kundencenter@schmalz.de

Bell suction cup (round)

SAXM 115 ED-85 G1/4-IG

Art.-Nr.: 10.01.19.00044

Technical data

Suction cup material	Elastodur ED
Material hardness [Shore A]	85.0 Shore A
Hose inner diameter (recom.) d	6.0 mm
Workpiece radius min. (convex)	50.0 mm
Suction force (-600mbar)	549.00 N
Weight	97.00 g
Lateral force	320.0 N
Lateral force oily surface	584.0 N
Volume	141.500 cm^3
Size	115.00
Number of folds	0.0
Connection	G1/4"-F
Product family	SAXM

Note: Suction force: The specified suction forces are theoretical values at a vacuum of -0.6 bar and with a dry, smooth and even workpiece surface - they do not include a safety factor Lateral force: The specified lateral forces are values measured at a vacuum of -0.6 bar with a dry or oily, smooth, flat workpiece surface. Depending on the workpiece surface and its quality, the actual values may deviate from these values Hose diameter: The recommended hose diameter refers to a hose length of approx. 2 m

Ordering Data Spare Parts 10.01.19.00044

Typ		Item number
Schmalz-Connector-Adapter	SC-A 065 G1/4-IG L	10.01.06.02774

Ordering Data Wear Parts 10.01.19.00044

Typ		Item number
Bell suction cup (round)	SAXM 115 ED-85 SC065	10.01.19.00010
Schmalz-Connector-Screw	SC-S 065 FDC-L	10.01.06.02805

Contact Schmalz: J. Schmalz GmbH, Johannes-Schmalz-Str. 1 • 72293 Glatten • +49 7443 2403-105 • kundencenter@schmalz.de