Bell suction cup (round)

# SAXM 60 ED-85 M10-AG

Art.-Nr.: 10.01.19.00031

SAXM 60 ED-85 M10-AG

## Technical data

| | |
|---|---|
| Suction cup material | Elastodur ED |
| Material hardness [Shore A] | 85.0 Shore A |
| Size | 60.00 |
| Connection | M10-AG |
| Nipple material | Aluminum |

Bell-shaped suction cup SAXM (elastomer part + connection element) is delivered assembled. As an alternative the individual parts can also be ordered separately. To do this, the following ordering steps are required:

- Bell-shaped suction cup of type SAXM (step 1) – elastomer part, available in various diameters
- Connector upper part (step 2) – available with various threads
- Connector lower part (step 3) – including molded friction disc

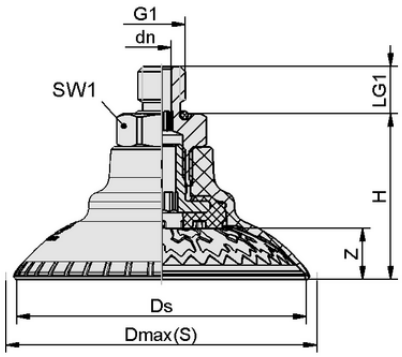


Design data SAXM 60 ED-85 M10-AG

## Design data

| | |
|---|---|
| Height H | 35.30 mm |
| Nominal diameter dn | 4.10 mm |
| Thread G1 | M10-M |
| Thread length LG1 | 10.0 mm |
| Key width SW1 | 17.0 mm |
| Spring stroke Z | 10.9 mm |
| Diameter Ds | 61.5 mm |
| Diameter Dmax(S) | 69.7 mm |

Note: Acceptable dimensional tolerances for elastomer parts concerning to DIN ISO 3302-1 M3



**Contact Schmalz:** J. Schmalz GmbH, Johannes-Schmalz-Str. 1 • 72293 Glatten • +49 7443 2403-105 • kundencenter@schmalz.de

Bell suction cup (round)

# SAXM 60 ED-85 M10-AG

Art.-Nr.: 10.01.19.00031

## Technical data

| | |
|---|---|
| Suction cup material | Elastodur ED |
| Material hardness [Shore A] | 85.0 Shore A |
| Hose inner diameter (recom.) d | 6.0 mm |
| Workpiece radius min. (convex) | 30.0 mm |
| Suction force (-600mbar) | 154.00 N |
| Weight | 30.00 g |
| Lateral force | 85.0 N |
| Lateral force oily surface | 155.0 N |
| Volume | 24.200 $cm^3$ |
| Size | 60.00 |
| Number of folds | 0.0 |
| Connection | M10-M |
| Product family | SAXM |

Note: Suction force: The specified suction forces are theoretical values at a vacuum of -0.6 bar and with a dry, smooth and even workpiece surface - they do not include a safety factor Lateral force: The specified lateral forces are values measured at a vacuum of -0.6 bar with a dry or oily, smooth, flat workpiece surface. Depending on the workpiece surface and its quality, the actual values may deviate from these values Hose diameter: The recommended hose diameter refers to a hose length of approx. 2 m

## Ordering Data Spare Parts 10.01.19.00031

| Typ | | Item number |
|---|---|---|
| Schmalz-Connector-Adapter | SC-A 055 M10-AG L | 10.01.06.02822 |

## Ordering Data Wear Parts 10.01.19.00031

| Typ | | Item number |
|---|---|---|
| Bell suction cup (round) | SAXM 60 ED-85 SC055 | 10.01.19.00007 |
| Schmalz-Connector-Screw | SC-S 055 FDC-L | 10.01.06.02804 |



**Contact Schmalz:** J. Schmalz GmbH, Johannes-Schmalz-Str. 1 • 72293 Glatten • +49 7443 2403-105 • kundencenter@schmalz.de