Bellows suction cups (round)

FSGA 78 SI-55 G1/4-AG CFFP80

Art.-Nr.: 10.01.06.06415



FSGA 78 SI-55 G1/4-AG CFFP80

Technical data

Attribute	Value
Suction cup material	Silicone SI
Material hardness [Shore A]	55.0 Shore A
Size	78.00
Number of folds	1.5
Nipple material	Aluminum

The bellows suction cup, available in various diameters, is optionally delivered with a glued sealing ring.

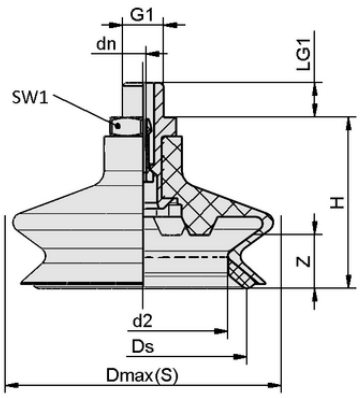

Design data FSGA 78 SI-55 G1/4-AG CFFP80

Design data

Attribute	Value
Height H	54.40 mm
Nominal diameter dn	0.70 mm
d2	54.0 mm
Thread G1	G1/4"-M
Thread length LG1	11.0 mm
Key width SW1	21.0 mm
Spring stroke Z	17.0 mm
Diameter Ds	66.2 mm
Diameter Dmax(S)	84.5 mm

Contact Schmalz: J. Schmalz GmbH, Johannes-Schmalz-Str. 1 • 72293 Glatten • +49 7443 2403-105 • kundencenter@schmalz.de

Bellows suction cups (round)

FSGA 78 SI-55 G1/4-AG CFFP80

Art.-Nr.: 10.01.06.06415

Technical data

Attribute	Value
Suction cup material	Silicone SI
Material hardness [Shore A]	55.0 Shore A
Workpiece radius min. (convex)	37.5 mm
Pull-off force	160.00 N
Suction force (-600mbar)	137.40 N
Weight	75.00 g
Volume	68.800 cm^3
Size	78.00
Number of folds	1.5
Product family	FSGA

Further documentation

CAD data and other documents relating to the article can be found at: **www.schmalz.com/10.01.06.06415**

Ordering Data Spare Parts 10.01.06.06415

Typ		Item number
Bellows suction cup (round)	FGA 78 SI-55 N019 CF	10.01.06.06066
Check valve	SVN-FP-80 G1/4-AG N019	10.05.03.00413
Flight Pin FP	FP 80	10.05.04.00172

Contact Schmalz: J. Schmalz GmbH, Johannes-Schmalz-Str. 1 • 72293 Glatten • +49 7443 2403-105 • kundencenter@schmalz.de