Bellows suction cups (round)

FSGA 53 NK-45 G1/4-AG DRFP120

Art.-Nr.: 10.01.06.06343



FSGA 53 NK-45 G1/4-AG DRFP120

Technical data

Attribute	Value
Suction cup material	Natural rubber NK
Material hardness [Shore A]	45.0 Shore A
Size	53.00
Number of folds	1.5
Additional function suction cup	with sealing ring and flight pin 120
Nipple material	Aluminum

The bellows suction cup, available in various diameters, is optionally delivered with a glued sealing ring.

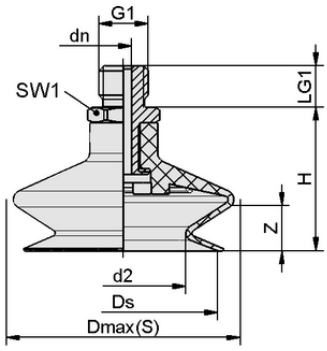

Design data FSGA 53 NK-45 G1/4-AG DRFP120

Design data

Attribute	Value
Height H	38.00 mm
Nominal diameter dn	1.10 mm
d2	33.0 mm
Thread G1	G1/4"-M
Thread length LG1	11.0 mm
Key width SW1	17.0 mm
Spring stroke Z	15.0 mm
Diameter Ds	50.0 mm
Additional function suction cup	with sealing ring and flight pin 120
Diameter Dmax(S)	60.0 mm

Contact Schmalz: J. Schmalz GmbH, Johannes-Schmalz-Str. 1 • 72293 Glatten • +49 7443 2403-105 • kundencenter@schmalz.de

Bellows suction cups (round)

FSGA 53 NK-45 G1/4-AG DRFP120

Art.-Nr.: 10.01.06.06343

Technical data

Attribute	Value
Suction cup material	Natural rubber NK
Material hardness [Shore A]	45.0 Shore A
Suction force (-600mbar)	51.30 N
Weight	27.00 g
Volume	26.488 cm^3
Size	53.00
Number of folds	1.5
Product family	FSGA

Further documentation

CAD data and other documents relating to the article can be found at: **www.schmalz.com/10.01.06.06343**

Ordering Data Spare Parts 10.01.06.06343

Typ		Item number
Bellows suction cup (round)	FGA 53 NK-45 N018 DR	10.01.06.02929
Check valve	SVN-FP-120 G1/4-AG N018	10.05.03.00411
Flight Pin FP	FP 120	10.05.04.00173

Contact Schmalz: J. Schmalz GmbH, Johannes-Schmalz-Str. 1 • 72293 Glatten • +49 7443 2403-105 • kundencenter@schmalz.de