Bellows suction cups (round)

FSGA 53 NK-45 G1/4-AG FP200

Art.-Nr.: 10.01.06.06341



FSGA 53 NK-45 G1/4-AG FP200

Technical data

Attribute	Value
Suction cup material	Natural rubber NK
Material hardness [Shore A]	45.0 Shore A
Size	53.00
Number of folds	1.5
Additional function suction cup	with flight pin 200
Nipple material	Aluminum

The bellows suction cup, available in various diameters, is optionally delivered with a glued sealing ring.

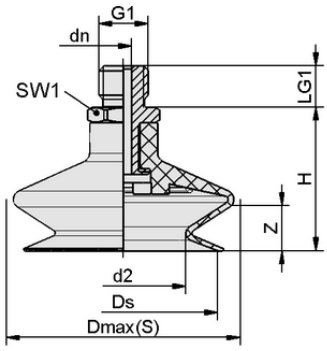

Design data FSGA 53 NK-45 G1/4-AG FP200

Design data

Attribute	Value
Height H	38.00 mm
Nominal diameter dn	1.90 mm
d2	33.0 mm
Thread G1	G1/4"-M
Thread length LG1	11.0 mm
Key width SW1	17.0 mm
Spring stroke Z	15.0 mm
Diameter Ds	50.0 mm
Additional function suction cup	with flight pin 200
Diameter Dmax(S)	60.0 mm

Contact Schmalz: J. Schmalz GmbH, Johannes-Schmalz-Str. 1 • 72293 Glatten • +49 7443 2403-105 • kundencenter@schmalz.de

Bellows suction cups (round)

FSGA 53 NK-45 G1/4-AG FP200

Art.-Nr.: 10.01.06.06341

Technical data

Attribute	Value
Suction cup material	Natural rubber NK
Material hardness [Shore A]	45.0 Shore A
Workpiece radius min. (convex)	100.0 mm
Pull-off force	95.00 N
Suction force (-600mbar)	51.30 N
Weight	27.00 g
Volume	26.488 cm^3
Size	53.00
Number of folds	1.5
Product family	FSGA

Further documentation

CAD data and other documents relating to the article can be found at: **www.schmalz.com/10.01.06.06341**

Ordering Data Spare Parts 10.01.06.06341

Typ		Item number
Bellows suction cup (round)	FGA 53 NK-45 N018	10.01.06.00428
Check valve	SVN-FP-200 G1/4-AG N018	10.05.03.00412
Flight Pin FP	FP 200	10.05.04.00174

Contact Schmalz: J. Schmalz GmbH, Johannes-Schmalz-Str. 1 • 72293 Glatten • +49 7443 2403-105 • kundencenter@schmalz.de