Bellows suction cup f SCG(S)-gripper

BCG 40 HT1-ESD-60 SC095

Art.-Nr.: 10.01.06.06236

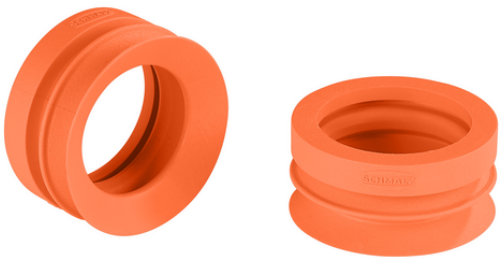

BCG 40 HT1-ESD-60 SC095

Technical data

Attribute	Value
Suction cup material	High temperature material HT1-ESD
Material hardness [Shore A]	60.0 Shore A
Size	40.00
Number of folds	1.5

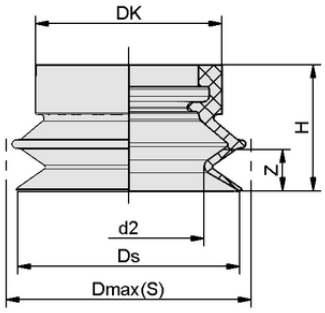

Design data BCG 40 HT1-ESD-60 SC095

Design data

Attribute	Value
Height H	19.50 mm
Head diameter Dk	39.7 mm
d2	26.0 mm
Spring stroke Z	6.5 mm
Diameter Ds	39.4 mm
Diameter Dmax(S)	42.0 mm

Technical data

Attribute	Value
Nipple family	SC 095
Suction cup material	High temperature material HT1-ESD
Material hardness [Shore A]	60.0 Shore A
Weight	8.00 g
Number of folds	1.5

Contact Schmalz: J. Schmalz GmbH, Johannes-Schmalz-Str. 1 • 72293 Glatten • +49 7443 2403-105 • kundencenter@schmalz.de

BCG 40 HT1-ESD-60 SC095

Art.-Nr.: 10.01.06.06236

Further documentation

CAD data and other documents relating to the article can be found at: **www.schmalz.com/10.01.06.06236**

Contact Schmalz: J. Schmalz GmbH, Johannes-Schmalz-Str. 1 • 72293 Glatten • +49 7443 2403-105 • kundencenter@schmalz.de