Bellows suction cups SI-HD (round)

FSGA 20 SI-HD-65 G1/8-IG

Art.-Nr.: 10.01.06.04187

FSGA 20 SI-HD-65 G1/8-IG

Technical data

Suction cup material	Silicone SI-HD
Material hardness [Shore A]	65.0 Shore A
Size	20.00
Number of folds	1.5
Connection	G1/8"-F
Vacuum connection	G1/8"-F
Nipple material	Aluminum
Material characteristics	FDA-compatible

Suction cup FSGA (elastomer part + connection nipple) is delivered unassembled (diameters of 33 mm and more are assembled). The delivery consists of:

- Suction cup of type FGA – elastomer part, available in various diameters and materials
- Connection nipple of type SA-NIP – available with various threads

Available spare parts: suction cup FGA, connection nipple SA-NIP

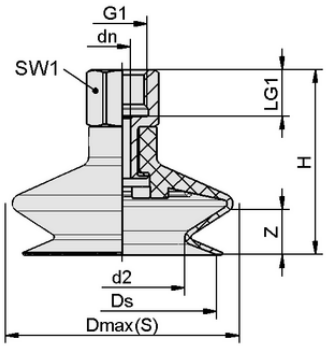

Design data FSGA 20 SI-HD-65 G1/8-IG

Design data

Height H	27.20 mm
Nominal diameter dn	3.50 mm
d2	11.0 mm
Thread G1	G1/8"-F
Thread length LG1	8.0 mm
Key width SW1	14.0 mm
Spring stroke Z	5.0 mm
Diameter Ds	18.1 mm
Diameter Dmax(S)	21.0 mm

Note: Acceptable dimensional tolerances for elastomer parts concerning to DIN ISO 3302-1 M3

Contact Schmalz: J. Schmalz GmbH, Johannes-Schmalz-Str. 1 • 72293 Glatten • +49 7443 2403-105 • kundencenter@schmalz.de

Bellows suction cups SI-HD (round)

FSGA 20 SI-HD-65 G1/8-IG

Art.-Nr.: 10.01.06.04187

Technical data

Suction cup material	Silicone SI-HD
Material hardness [Shore A]	65.0 Shore A
Hose inner diameter (recom.) d	4.0 mm
Workpiece radius min. (convex)	30.0 mm
Pull-off force	10.70 N
Suction force (-600mbar)	4.70 N
Weight	5.80 g
Volume	1.150 cm^3
Size	20.00
Number of folds	1.5
Product family	FSGA
Connection	G1/8-IG

Note: Suction force: The specified suction forces are theoretical values at a vacuum of -0.6 bar and with a dry, smooth and even workpiece surface - they do not include a safety factor Pull-off force: The pull-off force of the versions made of natural rubber is reduced by about 40% Hose diameter: The recommended hose diameter refers to a hose length of approx. 2 m

Ordering Data Accessories 10.01.06.04187

Typ		Item number
Schmalz Pad Insert PEEK	SPI 18 PEEK	10.01.06.03284

Ordering Data Spare Parts 10.01.06.04187

Typ		Item number
Suction cup connection nipple	SA-NIP N016 G1/8-IG DN350	10.01.06.05731
Bellows suction cup SI-HD (round)	FGA 20 SI-HD-65 N016	10.01.06.04150

Contact Schmalz: J. Schmalz GmbH, Johannes-Schmalz-Str. 1 • 72293 Glatten • +49 7443 2403-105 • kundencenter@schmalz.de