Bellows suction cups (round)

FSGA 11 HT1-60 G1/8-IG

Art.-Nr.: 10.01.06.01232

FSGA 11 HT1-60 G1/8-IG

Technical data

Suction cup material	High temperature material HT1
Material hardness [Shore A]	60.0 Shore A
Size	11.00
Number of folds	1.5
Connection	G1/8"-F
Vacuum connection	G1/8"-F
Nipple material	Aluminum

Suction cup FSGA (elastomer part + connection nipple) is delivered unassembled (diameters of 33 mm and more are assembled). The delivery consists of:

- Suction cup of type FGA – elastomer part, available in various diameters and materials
- Connection nipple of type SA-NIP – available with various threads

Available spare parts: suction cup FGA, connection nipple SA-NIP

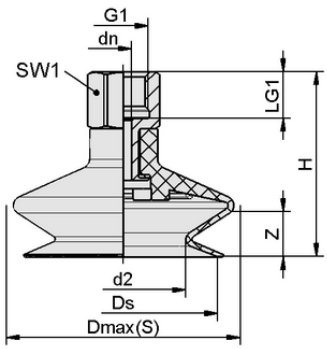

Design data FSGA 11 HT1-60 G1/8-IG

Design data

Height H	28.00 mm
Nominal diameter dn	3.50 mm
d2	5.1 mm
Thread G1	G1/8"-F
Thread length LG1	8.0 mm
Key width SW1	14.0 mm
Spring stroke Z	4.0 mm
Diameter Ds	10.4 mm
Diameter Dmax(S)	13.0 mm

Note: Acceptable dimensional tolerances for elastomer parts concerning to DIN ISO 3302-1 M3

Contact Schmalz: J. Schmalz GmbH, Johannes-Schmalz-Str. 1 • 72293 Glatten • +49 7443 2403-105 • kundencenter@schmalz.de

Bellows suction cups (round)

FSGA 11 HT1-60 G1/8-IG

Art.-Nr.: 10.01.06.01232

Technical data

Suction cup material	High temperature material HT1
Material hardness [Shore A]	60.0 Shore A
Hose inner diameter (recom.) d	4.0 mm
Workpiece radius min. (convex)	10.0 mm
Pull-off force	3.80 N
Suction force (-600mbar)	0.95 N
Weight	5.10 g
Volume	0.225 cm^3
Size	11.00
Number of folds	1.5
Product family	FSGA
Connection	G1/8-IG

Note: Suction force: The specified suction forces are theoretical values at a vacuum of -0.6 bar and with a dry, smooth and even workpiece surface - they do not include a safety factor Pull-off force: The pull-off force of the versions made of natural rubber is reduced by about 40% Hose diameter: The recommended hose diameter refers to a hose length of approx. 2 m

Ordering Data Accessories 10.01.06.01232

Typ		Item number
Schmalz Pad Insert PEEK	SPI 11 PEEK	10.01.06.03281

Ordering Data Spare Parts 10.01.06.01232

Typ		Item number
Suction cup connection nipple	SA-NIP N016 G1/8-IG DN350	10.01.06.05731

Ordering Data Wear Parts 10.01.06.01232

Typ		Item number
Bellows suction cup (round)	FGA 11 HT1-60 N016	10.01.06.01247

Contact Schmalz: J. Schmalz GmbH, Johannes-Schmalz-Str. 1 • 72293 Glatten • +49 7443 2403-105 • kundencenter@schmalz.de