Bellows suction cup (round)

SAB 100 NBR-60 RA

Art.-Nr.: 10.01.06.01058

SAB 100 NBR-60 RA

Technical data

Suction cup material	Nitrile rubber NBR
Material hardness [Shore A]	60.0 Shore A
Size	100.00
Number of folds	1.5
Connection	RA
Nipple material	Aluminum

Suction cup SAB, available in various diameters, is delivered with connection nipple vulcanized to elastomer part.

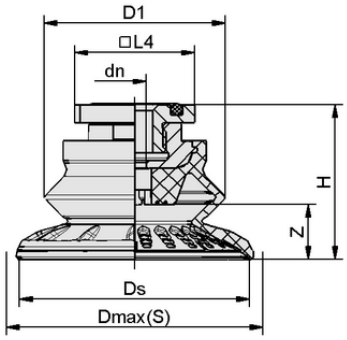

Design data SAB 100 NBR-60 RA

Design data

Height H	56.30 mm
Outside diameter D1	77.0 mm
Nominal diameter dn	6.00 mm
Spring stroke Z	25.8 mm
Diameter Ds	100.8 mm
Length L4	31.80 mm
Diameter Dmax(S)	110.0 mm

Note: Acceptable dimensional tolerances for elastomer parts concerning to DIN ISO 3302-1 M3

Contact Schmalz: J. Schmalz GmbH, Johannes-Schmalz-Str. 1 • 72293 Glatten • +49 7443 2403-105 • kundencenter@schmalz.de

Bellows suction cup (round)

SAB 100 NBR-60 RA

Art.-Nr.: 10.01.06.01058

Technical data

Suction cup material	Nitrile rubber NBR
Material hardness [Shore A]	60.0 Shore A
Hose inner diameter (recom.) d	6.0 mm
Workpiece radius min. (convex)	90.0 mm
Pull-off force	357.00 N
Suction force (-600mbar)	190.00 N
Weight	97.40 g
Lateral force	295.0 N
Lateral force oily surface	214.0 N
Volume	115.000 cm^3
Size	100.00
Number of folds	1.5
Product family	SAB

Note: Suction force: The specified suction forces are theoretical values at a vacuum of -0.6 bar and with a dry, smooth and even workpiece surface - they do not include a safety factor Lateral force: The specified lateral forces are values measured at a vacuum of -0.6 bar with a dry or oily, smooth, flat workpiece surface. Depending on the workpiece surface and its quality, the actual values may deviate from these values Hose diameter: The recommended hose diameter refers to a hose length of approx. 2 m

Contact Schmalz: J. Schmalz GmbH, Johannes-Schmalz-Str. 1 • 72293 Glatten • +49 7443 2403-105 • kundencenter@schmalz.de