Bellows suction cup (round)

SAB 125 NBR-60 M10-AG

Art.-Nr.: 10.01.06.01004

SAB 125 NBR-60 M10-AG

Technical data

Suction cup material	Nitrile rubber NBR
Material hardness [Shore A]	60.0 Shore A
Size	125.00
Number of folds	1.5
Connection	M10-AG
Nipple material	Steel

Suction cup SAB, available in various diameters, is delivered with connection nipple vulcanized to elastomer part.

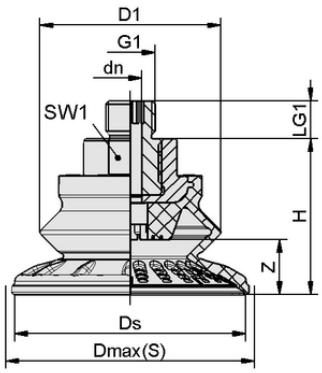

Design data SAB 125 NBR-60 M10-AG

Design data

Height H	67.80 mm
Outside diameter D1	94.0 mm
Nominal diameter dn	4.00 mm
Thread G1	M10-M
Thread length LG1	12.0 mm
Key width SW1	22.0 mm
Spring stroke Z	32.0 mm
Diameter Ds	126.0 mm
Diameter Dmax(S)	135.0 mm

Note: Acceptable dimensional tolerances for elastomer parts concerning to DIN ISO 3302-1 M3

Contact Schmalz: J. Schmalz GmbH, Johannes-Schmalz-Str. 1 • 72293 Glatten • +49 7443 2403-105 • kundencenter@schmalz.de

Bellows suction cup (round)

SAB 125 NBR-60 M10-AG

Art.-Nr.: 10.01.06.01004

Technical data

Suction cup material	Nitrile rubber NBR
Material hardness [Shore A]	60.0 Shore A
Hose inner diameter (recom.) d	9.0 mm
Workpiece radius min. (convex)	140.0 mm
Pull-off force	558.00 N
Suction force (-600mbar)	250.00 N
Weight	193.60 g
Lateral force	410.0 N
Lateral force oily surface	335.0 N
Volume	220.000 cm^3
Size	125.00
Number of folds	1.5
Product family	SAB

Note: Suction force: The specified suction forces are theoretical values at a vacuum of -0.6 bar and with a dry, smooth and even workpiece surface - they do not include a safety factor Lateral force: The specified lateral forces are values measured at a vacuum of -0.6 bar with a dry or oily, smooth, flat workpiece surface. Depending on the workpiece surface and its quality, the actual values may deviate from these values Hose diameter: The recommended hose diameter refers to a hose length of approx. 2 m

Contact Schmalz: J. Schmalz GmbH, Johannes-Schmalz-Str. 1 • 72293 Glatten • +49 7443 2403-105 • kundencenter@schmalz.de