Bellows suction cups (round)

FSGA 20 HT1-60 M5-AG

Art.-Nr.: 10.01.06.00937

FSGA 20 HT1-60 M5-AG

Technical data

Suction cup material	High temperature material HT1
Material hardness [Shore A]	60.0 Shore A
Size	20.00
Number of folds	1.5
Connection	M5-M
Vacuum connection	M5-M
Nipple material	Aluminum

Suction cup FSGA (elastomer part + connection nipple) is delivered unassembled (diameters of 33 mm and more are assembled). The delivery consists of:

- Suction cup of type FGA – elastomer part, available in various diameters and materials
- Connection nipple of type SA-NIP – available with various threads

Available spare parts: suction cup FGA, connection nipple SA-NIP

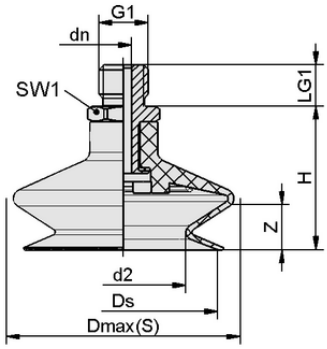

Design data FSGA 20 HT1-60 M5-AG

Design data

Height H	20.20 mm
Nominal diameter dn	2.50 mm
d2	11.0 mm
Thread G1	M5-M
Thread length LG1	5.0 mm
Key width SW1	7.0 mm
Spring stroke Z	5.0 mm
Diameter Ds	18.1 mm
Diameter Dmax(S)	21.0 mm

Note: Acceptable dimensional tolerances for elastomer parts concerning to DIN ISO 3302-1 M3

Contact Schmalz: J. Schmalz GmbH, Johannes-Schmalz-Str. 1 • 72293 Glatten • +49 7443 2403-105 • kundencenter@schmalz.de

Bellows suction cups (round)

FSGA 20 HT1-60 M5-AG

Art.-Nr.: 10.01.06.00937

Technical data

Suction cup material	High temperature material HT1
Material hardness [Shore A]	60.0 Shore A
Hose inner diameter (recom.) d	2.0 mm
Workpiece radius min. (convex)	20.0 mm
Pull-off force	10.70 N
Suction force (-600mbar)	4.70 N
Weight	2.70 g
Volume	1.150 cm^3
Size	20.00
Number of folds	1.5
Product family	FSGA
Connection	M5-AG

Note: Suction force: The specified suction forces are theoretical values at a vacuum of -0.6 bar and with a dry, smooth and even workpiece surface - they do not include a safety factor Pull-off force: The pull-off force of the versions made of natural rubber is reduced by about 40% Hose diameter: The recommended hose diameter refers to a hose length of approx. 2 m

Ordering Data Accessories 10.01.06.00937

Typ		Item number
Schmalz Pad Insert PEEK	SPI 18 PEEK	10.01.06.03284

Ordering Data Spare Parts 10.01.06.00937

Typ		Item number
Suction cup connection nipple	SA-NIP N016 M5-AG DN250	10.01.06.00123

Ordering Data Wear Parts 10.01.06.00937

Typ		Item number
Bellows suction cup (round)	FGA 20 HT1-60 N016	10.01.06.00870

Contact Schmalz: J. Schmalz GmbH, Johannes-Schmalz-Str. 1 • 72293 Glatten • +49 7443 2403-105 • kundencenter@schmalz.de