Flat suction cup (oval)

SGON 90x30 SI-HD-65 G1/4-IG

Art.-Nr.: 10.01.05.01061

SGON 90x30 SI-HD-65 G1/4-IG

Technical data

Suction cup material	Silicone SI-HD
Material hardness [Shore A]	65.0 Shore A
Connection	G1/4"-F
Dimension (LxW)	90x30
Nipple material	Aluminum

Suction cup SGON (elastomer part + connection nipple) is delivered unassembled. The delivery consists of:

- Suction cup of type SGO – elastomer part, available in various dimensions (LxW) and materials
- Connection nipple of type SA-NIP – available with various threads
- Cups of the size 24 x 8 mm and larger are delivered with a two-ear clamp

Available spare parts: suction cup SGO, connection nipple SA-NIP, two-ear clamp

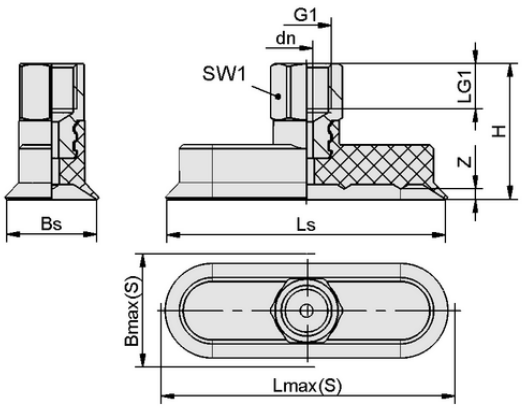

Design data SGON 90x30 SI-HD-65 G1/4-IG

Design data

Height H	36.00 mm
Nominal diameter dn	3.50 mm
Thread G1	G1/4"-F
Thread length LG1	12.0 mm
Key width SW1	17.0 mm
Spring stroke Z	3.5 mm
Suction cup width Bs	24.00 mm
Ls	74.00 mm
Lmax.(S)	92.50 mm
Bmax(S)	33.00 mm

Note: Acceptable dimensional tolerances for rubber parts concerning to DIN ISO 3302-1 M3.

Contact Schmalz: J. Schmalz GmbH, Johannes-Schmalz-Str. 1 • 72293 Glatten • +49 7443 2403-105 • kundencenter@schmalz.de

Flat suction cup (oval)

SGON 90x30 SI-HD-65 G1/4-IG

Art.-Nr.: 10.01.05.01061

Technical data

Suction cup material	Silicone SI-HD
Material hardness [Shore A]	65.0 Shore A
Hose inner diameter (recom.) d	6.0 mm
Workpiece radius min. (convex)	35.0 mm
Suction force (-600mbar)	112.60 N
Weight	35.30 g
Volume	9.473 cm^3
Number of folds	0.0
Product family	SGON
Dimension (LxW)	90x30

Note: Suction force: The suction force values are theoretical values at -0.6 bar vacuum and a dry, smooth and even workpiece surface – they are specified without safety factors. Hose inner diameter: The recommended hose diameter refers to a hose length of approx. 2 m

Ordering Data Spare Parts 10.01.05.01061

Typ		Item number
Flat suction cup (oval)	SGO 90x30 SI-HD-65 N023	10.01.05.01041
Suction cup connection nipple	SA-NIP N023 G1/4-IG DN350	10.01.05.00121
Two-ear clamp	ZOKL 15-18	10.07.10.00033

Contact Schmalz: J. Schmalz GmbH, Johannes-Schmalz-Str. 1 • 72293 Glatten • +49 7443 2403-105 • kundencenter@schmalz.de