Flat suction cup (oval)

# SAOF 120x60 NBR-45 G1/4-IG

Art.-Nr.: 10.01.05.00595

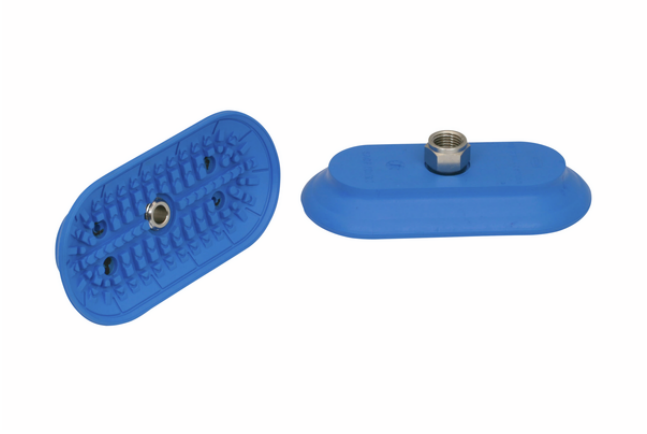

SAOF 120x60 NBR-45 G1/4-IG

## Technical data

| | |
|---|---|
| Suction cup material | Nitrile rubber NBR |
| Material hardness [Shore A] | 45.0 Shore A |
| Connection | G1/4-IG |
| Dimension (LxW) | 120x60 |
| Nipple material | Nickel plated |

Suction cup SAOF, available in various diameters, is delivered with connection nipple vulcanized to elastomer part.

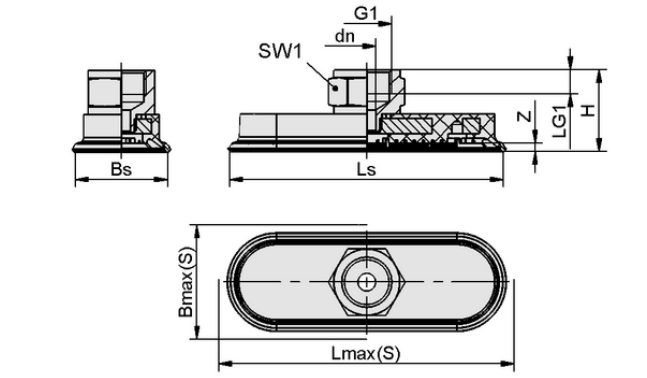


Design data SAOF 120x60 NBR-45 G1/4-IG

## Design data

| | |
|---|---|
| Height H | 32.00 mm |
| Nominal diameter dn | 8.00 mm |
| Thread G1 | G1/4"-F |
| Thread length LG1 | 8.0 mm |
| Key width SW1 | 17.0 mm |
| Spring stroke Z | 6.0 mm |
| Suction cup width Bs | 57.60 mm |
| Ls | 126.60 mm |
| Lmax.(S) | 128.00 mm |
| Bmax(S) | 65.00 mm |

Note: Acceptable dimensional tolerances for elastomer parts concerning to DIN ISO 3302-1 M3



**Contact Schmalz:** J. Schmalz GmbH, Johannes-Schmalz-Str. 1 • 72293 Glatten • +49 7443 2403-105 • kundencenter@schmalz.de

Flat suction cup (oval)

# SAOF 120x60 NBR-45 G1/4-IG

Art.-Nr.: 10.01.05.00595

## Technical data

| | |
|---|---|
| Suction cup material | Nitrile rubber NBR |
| Material hardness [Shore A] | 45.0 Shore A |
| Hose inner diameter (recom.) d | 6.0 mm |
| Workpiece radius min. (convex) | 75.0 mm |
| Suction force (-600mbar) | 312.00 N |
| Weight | 87.00 g |
| Lateral force | 254.0 N |
| Lateral force oily surface | 170.0 N |
| Volume | 39.900 $cm^3$ |
| Number of folds | 0.0 |
| Product family | SAOF |
| Dimension (LxW) | 120x60 |

Note: Suction force: The specified suction forces are theoretical values at a vacuum of -0.6 bar and with a dry, smooth and even workpiece surface - they do not include a safety factor Lateral force: The specified lateral forces are values measured at a vacuum of -0.6 bar with a dry or oily, smooth, flat workpiece surface. Depending on the workpiece surface and its quality, the actual values may deviate from these values Hose diameter: The recommended hose diameter refers to a hose length of approx. 2 m



**Contact Schmalz:** J. Schmalz GmbH, Johannes-Schmalz-Str. 1 • 72293 Glatten • +49 7443 2403-105 • kundencenter@schmalz.de