Flat suction cup (round)

SUF 15 NBR-ESD-55 M5-IG

Art.-Nr.: 10.01.01.14164

SUF 15 NBR-ESD-55 M5-IG

Suction cup SUF (elastomer part + connector) is delivered assembled.

Available spare parts: suction cup SUF, connector SC

Technical data

Suction cup material	Nitrile rubber NBR-ESD
Material hardness [Shore A]	55.0 Shore A
Size	15.00
Vacuum connection	M5-F

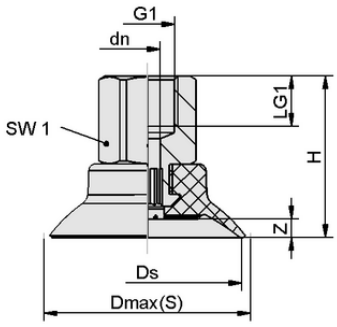

Design data SUF 15 NBR-ESD-55 M5-IG

Design data

Height H	19.00 mm
Nominal diameter dn	3.10 mm
Thread G1	M5-F
Thread length LG1	5.5 mm
Key width SW1	8.0 mm
Spring stroke Z	1.5 mm
Diameter Ds	15.0 mm
Diameter Dmax(S)	16.8 mm

Contact Schmalz: J. Schmalz GmbH, Johannes-Schmalz-Str. 1 • 72293 Glatten • +49 7443 2403-105 • kundencenter@schmalz.de

Flat suction cup (round)

SUF 15 NBR-ESD-55 M5-IG

Art.-Nr.: 10.01.01.14164

Technical data

Suction cup material	Nitrile rubber NBR-ESD
Material hardness [Shore A]	55.0 Shore A
Hose inner diameter (recom.) d	4.0 mm
Workpiece radius min. (convex)	20.0 mm
Pull-off force	9.00 N
Suction force (-600mbar)	9.00 N
Weight	2.10 g
Volume	0.220 cm^3
Size	15.00
Number of folds	0.0
Product family	SUF

Note: Suction force: The suction force values are theoretical values at -0.6 bar vacuum and a dry, smooth and even workpiece surface – they are specified without safety factors. Hose inner diameter: The recommended hose diameter refers to a hose length of approx. 2 m

Ordering Data Spare Parts 10.01.01.14164

Typ		Item number
Schmalz-Connector	SC 030 M5-IG	10.01.06.03440
Flat suction cup (round)	SUF 15 NBR-ESD-55 SC030	10.01.01.14032

Contact Schmalz: J. Schmalz GmbH, Johannes-Schmalz-Str. 1 • 72293 Glatten • +49 7443 2403-105 • kundencenter@schmalz.de