Bell suction cup (round)

SAG 60 NBR-60 G3/8-IG

Art.-Nr.: 10.01.01.12166

SAG 60 NBR-60 G3/8-IG

Technical data

Attribute	Value
Suction cup material	Nitrile rubber NBR
Material hardness [Shore A]	60.0 Shore A
Size	60.00
Connection	G3/8-IG
Nipple material	Aluminum

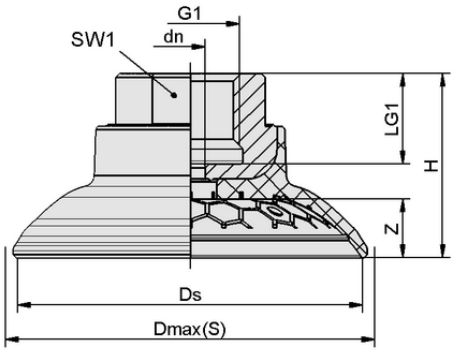

Design data SAG 60 NBR-60 G3/8-IG

Design data

Attribute	Value
Height H	31.00 mm
Nominal diameter dn	6.00 mm
Thread G1	G3/8"-F
Thread length LG1	15.0 mm
Key width SW1	22.0 mm
Spring stroke Z	10.6 mm
Diameter Ds	63.5 mm
Diameter Dmax(S)	70.5 mm

Contact Schmalz: J. Schmalz GmbH, Johannes-Schmalz-Str. 1 • 72293 Glatten • +49 7443 2403-105 • kundencenter@schmalz.de

Bell suction cup (round)

SAG 60 NBR-60 G3/8-IG

Art.-Nr.: 10.01.01.12166

Technical data

Attribute	Value
Suction cup material	Nitrile rubber NBR
Material hardness [Shore A]	60.0 Shore A
Hose inner diameter (recom.) d	6.0 mm
Workpiece radius min. (convex)	50.0 mm
Suction force (-600mbar)	122.00 N
Weight	31.1 g
Lateral force	153.0 N
Lateral force oily surface	80.0 N
Volume	22.000 cm^3
Size	60.00
Number of folds	0.0
Product family	SAG

Note: Suction force: The suction force values are theoretical values at -0.6 bar vacuum and a dry, smooth and even workpiece surface – they are specified without safety factors. Hose inner diameter: The recommended hose diameter refers to a hose length of approx. 2 m

Further documentation

CAD data and other documents relating to the article can be found at: **www.schmalz.com/10.01.01.12166**

Contact Schmalz: J. Schmalz GmbH, Johannes-Schmalz-Str. 1 • 72293 Glatten • +49 7443 2403-105 • kundencenter@schmalz.de