Flat suction cup (round)

SAF 60 NBR-60 G1/4-AG

Art.-Nr.: 10.01.01.10622

SAF 60 NBR-60 G1/4-AG

Technical data

Suction cup material	Nitrile rubber NBR
Material hardness [Shore A]	60.0 Shore A
Size	60.00
Connection	G1/4-AG
Nipple material	Aluminum

Suction cup SAF, available in various diameters, is delivered with connection nipple vulcanized to elastomer part.

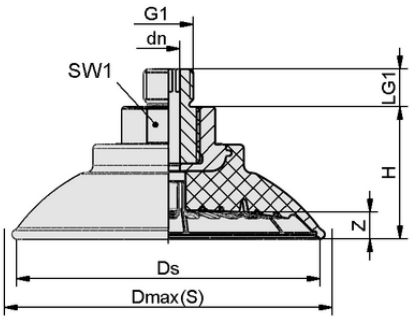

Design data SAF 60 NBR-60 G1/4-AG

Design data

Height H	31.00 mm
Nominal diameter dn	6.00 mm
Thread G1	G1/4"-M
Thread length LG1	10.0 mm
Key width SW1	22.0 mm
Spring stroke Z	6.0 mm
Diameter Ds	60.6 mm
Diameter Dmax(S)	67.0 mm

Note: Acceptable dimensional tolerances for elastomer parts concerning to DIN ISO 3302-1 M3

Contact Schmalz: J. Schmalz GmbH, Johannes-Schmalz-Str. 1 • 72293 Glatten • +49 7443 2403-105 • kundencenter@schmalz.de

Flat suction cup (round)

SAF 60 NBR-60 G1/4-AG

Art.-Nr.: 10.01.01.10622

Technical data

Suction cup material	Nitrile rubber NBR
Material hardness [Shore A]	60.0 Shore A
Hose inner diameter (recom.) d	6.0 mm
Workpiece radius min. (convex)	75.0 mm
Suction force (-600mbar)	150.00 N
Weight	46.40 g
Lateral force	105.0 N
Lateral force oily surface	85.0 N
Volume	16.700 cm^3
Size	60.00
Number of folds	0.0
Product family	SAF

Note: Suction force: The specified suction forces are theoretical values at a vacuum of -0.6 bar and with a dry, smooth and even workpiece surface - they do not include a safety factor Lateral force: The specified lateral forces are values measured at a vacuum of -0.6 bar with a dry or oily, smooth, flat workpiece surface. Depending on the workpiece surface and its quality, the actual values may deviate from these values Hose diameter: The recommended hose diameter refers to a hose length of approx. 2 m

Ordering Data Accessories 10.01.01.10622

Typ		Item number
Suction cup cover	SU 60	10.01.01.13585

Contact Schmalz: J. Schmalz GmbH, Johannes-Schmalz-Str. 1 • 72293 Glatten • +49 7443 2403-105 • kundencenter@schmalz.de